Georgia State University
Digital Archive @ GSU

Respiratory Therapy Theses | Department of Respiratory Therapy

1-21-2009

How Does Alteration of Airway Resistance Affect Delivered Tidal Volume in Adult Patients Receiving High-Frequency Oscillatory Ventilation?

Essam Ali Aljamhan
essam2002sa@yahoo.com

Follow this and additional works at: http://digitalarchive.gsu.edu/rt_theses

Recommended Citation
Aljamhan, Essam Ali, "How Does Alteration of Airway Resistance Affect Delivered Tidal Volume in Adult Patients Receiving High-Frequency Oscillatory Ventilation?" (2009). *Respiratory Therapy Theses.* Paper 1.

This Thesis is brought to you for free and open access by the Department of Respiratory Therapy at Digital Archive @ GSU. It has been accepted for inclusion in Respiratory Therapy Theses by an authorized administrator of Digital Archive @ GSU. For more information, please contact digitalarchive@gsu.edu.

HOW DOES ALTERATION OF AIRWAY RESISTANCE AFFECT DELIVERED TIDAL VOLUME IN ADULT PATIENTS RECEIVING HIGH-FREQUENCY OSCILLATORY VENTILATION?

By

Essam Ali Aljamhan

B.Sc. Boise State University, 2004.
A.S. Military College of Health Sciences, 1995.

A Thesis

Presented in Partial Fulfillment of the Requirements for the

Degree of
Masters of Science
in
Health Sciences
Major in
Respiratory Therapy

Atlanta, Georgia

2008

HOW DOES ALTERATION OF AIRWAY RESISTANCE AFFECT DELIVERED TIDAL VOLUME IN ADULT PATIENTS RECEIVING HIGH-FREQUENCY OSCILLATORY VENTILATION?

By

Essam Ali Aljamhan

B.Sc. Boise State University, 2004.
A.S. Military College of Health Sciences, 1995.

Approved By:

LYNDA GOODFELLOW, Ed.D, RRT, AE-C
Committee Chair

ARZU ARI, PhD, RRT, CPFT
Committee Member

ROBERT HARWOOD, MS, RRT
Committee Member

11/17/08
Date

Author's Statement

In presenting this thesis as a partial fulfillment of the requirements for the advanced degree from Georgia State University, I agree that the library of Georgia State University shall make it available for inspection and circulation in accordance with its regulations governing materials of this type. I agree that permission to quote, to copy from, or to publish this thesis may be granted by the professor under whose direction it was written, by the College of Health and Human Sciences director of graduate studies and research, or by me. Such quoting, copying, or publishing must be solely for scholarly purposes and will not involve potential financial gain. It is understood that any copying from or publication of this thesis which involves potential financial gain will not be allowed without my written permission.

_____

Signature of Author

Notice to Borrowers

All thesis deposited in Georgia State University Library must be used in accordance with the stipulations prescribed by the author in the preceding statement.

The Author of this thesis is: Essam Ali Aljamhan, RRT-NPS

Student's Name: Essam Ali Aljamhan, RRT-NPS

E-Mail: ESSAM2002SA@YAHOO.COM

Street Address: Alsulimaniah, P.O. Box 7897 (J431)

City, Zip Code, and Country: Riyadh, 11159, Saudi Arabia

The Chair of the Committee for this thesis is:

Professor's Name: LYNDA GOODFELLOW, Ed.D, RRT, AE-C

Department: Respiratory Therapy

College: Health and Human Sciences

Georgia State University

P.O. Box 3995

Atlanta, Georgia 30302-3995

Users of this thesis who are not regularly enrolled as students at Georgia State University are required to attest acceptance of the preceding stipulation by signing below. Libraries borrowing this thesis for the use of their patrons are required to see that each user records here the information requested.

NAME OF USER	ADDRESS	DATE	TYPE OF USE (EXAMINATION ONLY OR COPYING)

ACKNOWLEDGMENTS

The author wishes to express sincere appreciation to Professors Dr. Arzu Ari and Robert Harwood for their assistance in the preparation of this thesis. In addition, special thanks go out to Dr. Lynda Goodfellow whose familiarity with the needs and ideas of students was helpful throughout the early programming and the late phases of this undertaking.

Abstract

HOW DOES ALTERATION OF AIRWAY RESISTANCE AFFECT DELIVERED TIDAL VOLUME IN ADULT PATIENTS RECEIVING HIGH-FREQUENCY OSCILLATORY VENTILATION (HFOV)?

Concerns exist regarding the ability of HFOV to provide the needed lung protective ventilation for adult patients with ARDS. HFOV is increasingly being used as a lung protecting ventilation mode even if some of its protective attributes may be lost as the airway resistance (Raw) increases or decreases. In fact, in cases of shifting air resistance, HFOV may have caused lung injury. PURPOSE: The purpose of this study was to investigate the effect of airway resistance on tidal volume (Vt) delivered by HFOV to adult patients. Also, the study intended to determine direction for volume change when resistance increases or decreases. METHODS: An in vitro model was used to simulate an adult passive patient with ARDS using a breathing simulator (Active Servo Lung 5000, Ingmar Medical, Pittsburgh, PA, USA). Adjustable resistance and compliance for each lung was used. The resistance levels of 15, 30, 45 (cm H_2O/L/sec) were used for upper and lower Raw and CL was fixed at 40 mL/cm H2O. The ventilator (Sensormedics 3100B) was set to MAP = 35 cm H_2O, to insp-time of 33%, to bias flow =30 L/min, to delta-P of 80, and to 50% oxygen. Vt was recorded (n=3) for each Raw, and the data was collected on the host computer. Approximately 200-250 breaths of data for each Raw were captured via the ASL software and then converted to Excel for analysis. An average of 80 breathes (following the steady Vt level) was used in each analysis. DATA ANALYSIS: The data analysis was performed with one way ANOVA and with a post hoc Bonferroni test in order to determine the statistical significance of the delivered Vt with each Raw. A probability of ($p < 0.05$) was accepted as statistically significant. RESULTS: The descriptive statistics of the average delivered Vt with regard to each Raw (15, 30, 45 cm H2O/L/sec) were the number of experiments (n=3), mean Vt (93.52, 89.09, 85.99 mL), and standard deviations (SD) (1.38, 1.11, 1.10) respectively. There was an inverse relationship between tidal volume and airway resistance during HFOV. With all other variables kept constant, higher resistance caused less volume, whereas lower resistance caused more volume. The one-way ANOVA test showed that there were significant differences between the delivered tidal volumes. When the post hoc Bonferroni test was used, the data showed significant differences between airway resistances of 15 cm H2O/L/sec and 30 cm H2O/L/sec and between 15 cm H2O/L/sec and 45 cm H2O/L/sec. In contrast, no significant differences were found between airway resistances of 30 cm H2O/L/sec and 45 cm H2O/L/sec. CONCLUSION: Vt is not constant during HFOV. Airway resistance is one of the determinants of delivered tidal volume in adults with ARDS during HFOV. Airway resistance should be an important factor in ventilator management and in clinical experiments of patients on HFOV. Without a proper Vt measurement device HFOV should not be used as lung protective ventilation for adult patients with ARDS.

TABLE OF CONTENTS

List of Figures & Tables ii
List of Abbreviations iii

Chapter

1 Introduction 2
Purpose 5
Study Question 5
Significance 6
2 A Review of the Literature 7
HFOV Method of Operation 7
Successful Use of HFOV with Adult Patients 8
Vt Measurement Devices 11
Variables that Influence Vt in HFOV 12
HFOV Vt Stability 14
3 Research Methods 18
Lung Model 18
Ventilator 18
Protocol 19
Data Collection 19
Data Analysis 20
4 Results of the Study 22
5 Discussion 24
Limitations of the Study 26
Future studies 27
Conclusion 28
Appendix. A 29
References 33

LIST OF FIGURES & TABLES

Page

FIGURE 1 20

FIGURE 2 23

TABLE 1 22

List of Abbreviations

ARDS (Adult respiratory distress syndrome)

ARDSNet (ARDS Network trial)

ASL 5000 (Active Servo Lung 5000)

BF (Bias flow)

CDP (Continuous distending pressure)

CL (lung Compliance)

CMV (Conventional mechanical ventilation)

Delta-P (Pressure amplitude)

ETT (Endotracheal tube)

f (Frequency)

HFFI (High frequency flow interrupters)

HFJV (High frequency jet ventilation)

HFOV (High frequency oscillatory ventilation)

HFV (High-frequency ventilation)

ICU (Intensive care unit)

IBW (Ideal body weight)

I.D. (Internal diameter)

LPS (Lung protective strategy)

mPaw (Mean airway pressure)

OI (Oxygenation index)

Raw (Airway resistance)

PEEP (Positive end-expiratory pressure)

Vt (Tidal volume)

VILI (Ventilator-induced lung injury)

CHAPTER I

INTRODUCTION

Conventional mechanical ventilation (CMV) is one of the cornerstones of modern intensive care practices: its invention dramatically reduced intensive care unit (ICU) patient mortality. Unfortunately, it has been demonstrated that CMV has in many cases resulted in secondary lung damage caused by barotrauma, atelectrauma, and volutrauma, or by a combination of these adverse effects (Dreyfuss & Saumon, 1998). The secondary lung damage is referred to as ventilator-induced lung injury or VILI. VILI has been found to prompt an inflammatory response which can lead to adult respiratory distress syndrome (ARDS) (Dos Santos & Slutsky, 2000). The damage caused by VILI and ARDS can extend to other organs, leading to multi-organ failure (Slutsky & Tremblay, 1998). In a small number of adult patients, pulmonary gas exchange cannot be improved sufficiently by means of CMV without causing VILI (Imai et al., 2001).

In order to prevent VILI and to decrease the mortality in adult patients diagnosed with ARDS, a lung protective ventilation strategy has been investigated and suggested (ARDSNet, 2000). This strategy administers low tidal volume (Vt) with optimal positive end-expiratory pressure (PEEP) and has been implemented in adults during the ARDS Network trial (ARDSNet, 2000). ARDSNet recommendations are designed to prevent or to hold at a certain level the damage in the lung tissue with acceptable blood gas results. Today, more strategies to prevent lung damage are available within CMV. Some of the recommended strategies include: recruitment maneuvers, high PEEP level, prone

positioning, and pressure-limited ventilation (Cooper, 2004). Unfortunately, it has been found that not every clinical condition benefits from lung protective strategies delivered during CMV (Slutsky & Tremblay, 1998). In cases where CMV fails to support patient's oxygenation High-frequency ventilation (HFV) has been instituted. HFV is a non-conventional mode of ventilation that is now used in response to many clinical conditions.

Three basic types of HFV are currently utilized in intensive care units. These include high frequency oscillatory ventilation (HFOV), high frequency flow interrupters (HFFI), and high frequency jet ventilation (HFJV) (Soll, 2006). The different forms of HFV share a common underlying concept: the delivery of breaths at high frequencies and low tidal volumes, i.e. at volumes lower than anatomic dead space. HFOV, the subject of the present study, is both a pressure and time-cycled ventilator. Responding to a patient's lung mechanics, it can deliver variable tidal volumes. HFOV is similar to other high-frequency ventilators in that it achieves effective oxygenation by the application of a high mean airway pressure (mPaw), which is also referred to as the continuous distending pressure (CDP). HFOV, in contrast to other HFV typ`es, is characterized by the generation of pressure swings with an active expiration mechanism. Ritacca et al. (2003) have asserted that active expiration results both in improved PaCO2 elimination and in reduced gas trapping (Ritacca & Stewart, 2003). Currently, HFOV is the most widely used form of high-frequency ventilation for treating adult patients.

HFOV first emerged as a rescue strategy for adult patients with ARDS (Ritacca & Stewart, 2003). During the initial stages of ARDS, refractory hypoxemia develops as airway resistance and lung compliance deteriorates. As the severity of ARDS increases and further lung damage causes increased airway resistance and reduced lung compliance, conventional ventilation is not able to relieve the hypoxemia.

Regardless of the type of ventilation in ARDS patients, any increase or decrease of airway resistance will change the amount of delivered Vt (Kallet, Campbell, Dicker, Katz & Mackersie, 2005). If the delivered Vt changes during CMV it can be monitored, controlled, and treated by the RT in a timely manner that may help to protect the patient's lungs. In contrast, the HFOV is unable to monitor the volume delivered to the lungs. During HFOV any change in the delivered Vt as a result of changes in the patient's condition is difficult to detect. This can result in severe adverse effects on the patient's lungs. The adverse effects can be described in one of two ways; as a hypoventilation resulting in hypercarbia, or as an end-inspiratory alveolar overstretching which can release inflammatory mediators and prompt an inflammatory response that could lead to multi-organ failure.

As airway resistance changes, the inability to control or monitor the variable Vt with available HFOV could explain some adverse outcomes of studies that have compared HFOV to CMV in ARDS adult patients. Theoretically, HFOV achieves adequate gas exchange by creating tidal volumes smaller than a patient's dead space volume (Vd). Findings by Imai et al. (2001) – that HFOV may be a preferable option to

deliver lung protection strategy – could be associated to some extent with the theoretically low Vt delivered by the HFOV and with the ARDSNet findings from CMV. On the other hand, several investigators have reported controversial results of trials comparing HFOV with CMV in adult populations with respiratory distress syndrome (Bollen, Uiterwaal, & Van Vught, 2006). Since there is not enough scientific data on the effect of airway resistance on the delivered Vt by HFOV to ARDS in adult patients, the discrepancies between the reported results comparing HFOV and CMV could be related to the amount of Vt delivered by HFOV.

Purpose:

The purpose of this study was to investigate the effect of airway resistance on tidal volume delivered by HFOV to adult patients. This study investigated whether delivered tidal volume increased or decreased in response to airway resistance change. Furthermore, this study isolated one of the possible causes of the conflicts in results between several published studies, which examined the advantages and feasibilities of HFOV use in the adult population.

Study Question:

One research question directed this study: How does alteration in airway resistance affect delivered tidal volume in adult patients receiving HFOV?

Significance:

Concerns exist regarding the ability of HFOV to provide the needed lung protective ventilation for adult patients with ARDS. HFOV is increasingly being used as a lung protective ventilation mode even if the protective nature may be lost as the airway resistance (Raw) increases or decreases.

Results of this study will help to guide the clinical application and monitoring of HFOV in adult patients. This study will play an important role in redirecting the design of clinical trials comparing HFOV with CMV.

CHAPTER II

A REVIEW OF LITERATURE

The literature that informed this study focused on a number of areas: how to operate the HFOV for adult patients, successful use of HFOV in adult populations, the available devices for Vt measurement, Vt stability, and the variables that influence HFOV Vt. A literature search was conducted to identify all randomized trials of HFOV performed on adult patients with ARDS, with or without tidal volume involvement. The studies and reviews were collected from PubMed and similar health databases using the search terms *high frequency oscillatory ventilation*, *acute respiratory distress syndrome*, *tidal volume*, and *adult*. Very few studies were found that explored the relationship between delivered Vt and HFOV. Out of those studies conducted on human subjects, only one focused on adult patients with ARDS. Most of the reviewed studies involved either in vitro or animal models.

HFOV Method of Operation:

The Sensormedics 3100B (Sensormedics, Loma Linda, CA, USA) ventilator, which provides HFOV, has been approved by the United States Food and Drug Administration (FDA) and has been sold in the U.S. since 2001 (Fessler, & Hess, 2007). It is the only HFOV model in use. Fessler et al. (2007) and Fan & Stewart (2006) both reported that the best method to manage HFOV for adult patients is to operate on the following principles. First, it should use a bias flow of heated and humidified gas supplied across the proximal end of the endotracheal tube (ETT) set at 30–40 L/min.

Second, the mPaw at the proximal end of the endotracheal tube should be set at a relatively high pressure level of 35 – 45 cm H2O. In order to vibrate this pressurized flowing gas, the HFOV is equipped with a piston driven diaphragm that creates an oscillatory effect. Third, the frequency should be, in general, set between 3 and 8 Hz. A power control regulates the force and distance with which the piston moves from baseline. A portion of this flow is thereby pumped into and out of the patient by the oscillating piston.

Successful Use of HFOV with Adult Patients:

HFOV is a new, nonconventional mode of mechanical ventilation designed with the purpose of overcoming the limitations and adverse effects of CMV for adult patients (Ritacca & Stewart, 2003). HFOV has demonstrated some success in diminishing the reduction in pulmonary compliance, lung inflammation, and pathological changes of small airways and alveoli in ARDS patients. Imai et al. (2001) concluded that HFOV may be a preferable option as a lung protection strategy over CMV.

During the past several years many research studies have examined the various aspects of HFOV use in neonatal, pediatric populations, but few have centered on adult populations. After many controlled, randomized trials, HFOV use is now widely accepted for use in neonatal and pediatric populations. In contrast, adult HFOV use does not share the same popularity as there are fewer controlled, randomized trials to support it. The studies done on neonatal and pediatric populations cannot be used to support the use of

HFOV in adults because of the differences in physiological structures between the populations.

The review of the literature found several large-scale adult HFOV studies to be mutually relevant. Mehta et al. (2004) examined the clinical experience of HFOV in adults in three medical-surgical ICUs in Toronto, Canada from January 1998 to February 2002. The group described the patient characteristics and the needed strategies for improved outcomes when HFOV was used. Even though HFOV in different study findings showed promise as a rescue therapy to improve oxygenation in patients not responding to CMV, Mehta et al. (2004) concluded that the use of HFOV therapy in adults with ARDS has limited support. They added that the use of HFOV therapy in adults with ARDS awaits the performance of more thorough trials comparing HFOV to CMV using low tidal volumes and that more outcome evaluation, such as mortality, is needed. As the authors themselves point out, the three medical-surgical ICUs used to collect their study data did not have a standard method of practice for HFOV, which is certainly a limitation to the study findings.

The findings of Mehta et al. (2004) contradict those of another study published earlier by Derdak et al. (2002). This latter study evaluated, prospectively, the safety and efficacy of HFOV compared with CMV on 148 adult patients with ARDS. The initial Vt used in the CMV group was 6 – 10 ml/kg, which is higher than the ARDSNet-suggested Vt. Researchers found that there were no significant differences in hemodynamic variables, oxygenation failure, ventilation failure, barotraumas, or mucus plugging

between the treatment groups. There was no significant trend toward improved 30-day mortality (evaluated as a secondary outcome) in those receiving HFOV as compared with conventional mechanical ventilation. They concluded that high frequency oscillation is a safe and effective mode of ventilation for treating ARDS in adults.

In 2005, a multicentre, randomized trial in four intensive care units was conducted to compare the safety and efficacy of HFOV with CMV for early intervention in adult patients with ARDS (Bollen et al., 2005). The CMV strategy was aimed at reducing tidal volumes. In this study a Vt of 8.4 ± 2.0 ml/kg was used. The study did not find significant differences in efficacy or safety between HFOV and CMV as an early treatment for ARDS. Further analysis suggested that HFOV better prevented mortality compared to CMV specifically in patients with a higher baseline oxygenation index (OI).

The Bollen et al. (2005) study's report of success with HFOV could be related to certain clinical conditions that have not been fully examined until even more recently. An example of such helpful qualification is a study conducted in Prague of Czech Republic that examined the effect of pulmonary ARDS (ARDS-p) and extrapulmonary ARDS (ARDS-exp) on physiological and clinical parameters (Pachl, Roubik, Waldauf, Fric, & Zabrodsky, 2006). Thirty ARDS patients were enrolled in the study. HFOV showed better lung recruitment for the ARDS-exp group as documented by a statistically significant increase in values of the PaO2/FIO2 index. The authors of this study suggested that conventional ventilators would be necessary for proper indication of treatment, due to their ability to measure and monitor lung compliance. HFOV showed

some advantages when used in ARDS triggered by extrapulmonary diseases, but was equal to or worse in patients with pulmonary insult.

Vt Measurement Devices:

A major difference between CMV and HFOV is that with CMV in order to ventilate a patient, an appropriate Vt is chosen according to the patient's ideal body weight (IBW), which is determined by the patient's height and gender. With CMV there is a Vt control that can be adjusted to guarantee the delivery of a set Vt to the patient. The 3100B HFOV does not have a Vt measurement because it is assumed that it will always deliver a low Vt. The lack of a measurement device for Vt on HFOV does not however mean that it is not measurable. There are some external measurement devices that can be used to determine the Vt delivered by HFOV.

Four devices to measure Vt during HFOV have been tested and proven to be reliable and accurate in an in vitro study (Hager et al., 2006). These devices include an ultrasound flow meter, three differential pressure pneumotachometers, a modified Pitot tube, and an adult hot wire anemometer. These devices are widely utilized in in-vitro studies to investigate the Vt delivered to patients through HFOV. Hager et al. concluded that Vt can be measured during HFOV using various devices, but some of the suggested devices require calibration to the frequency of the HFOV.

The possibility of measuring Vt during HFOV was examined by Scalfaro, Pillow, Sly, and Cotting (2001). They assessed the suitability of a hot-wire anemometer infant

monitoring system for measuring flow and Vt proximal to the ETT during HFOV. The study was done on an in-vitro lung model simulating moderate to severe respiratory distress. The researchers concluded that the Florian infant hot-wire flow meter and monitoring system provided reliable measurements of Vt at the airway opening during high-frequency oscillatory ventilation when employed at frequencies of 8-13 Hz. Scalfaro et al. recommended that bedside application of Vt measurement with hot-wire flow meter could improve monitoring of patients receiving high-frequency oscillatory ventilation.

Variables that Influence Vt in HFOV:

Along with the known effect of lung compliance and airway resistance on delivered Vt with CMV, any change in the pressure and flow delivering the breath or end expiratory volume will also influence the delivered Vt. In order to research the possible variables that could influence the Vt delivered with HFOV, scientists have looked at the ventilator, circuit, and patient variables.

For the ventilator variables, Niederer, Leuthold, Bush, Spahn, and Schmid (1994) studied lung surrogates and healthy dogs to determine the influence of the HFOV dynamic properties on the oscillatory volume delivered through the endotracheal tube. First, the relationship between the Vt of the pump (oscillator) and the delivered volume in the lung surrogates was analyzed. Then PaCO2 was measured as a function of the delivered volume in a number of experiments performed with healthy dogs. This study also recognized that a minimal condition for adequate gas exchange to take place is having a delivered volume that exceeds the machine-related dead space. One of the study

conclusions was to monitor the delivered volume under clinical conditions because Vt delivery deviates considerably from the tidal volume of the pump, due to the HFOV dynamic (particularly resonance) effects.

Frequency in both CMV and HFOV is vital element for controlling the PaCO2 levels. Opposite to that in CMV, frequency in HFOV has to be decreased in order to remove more CO2, which means that there is some effect on Vt. Fessler, Hager, and Brower (2008) observed thirty adult patients receiving HFOV for the management of severe ARDS. They assessed the feasibility of using respiratory frequencies of up to 15 Hz during HFOV in patients with ARDS as a means of delivering low Vt. The study concluded that most adults can maintain adequate gas exchange using HFOV frequencies above 5 - 6 Hz (the recommended frequency level in adults) (Fessler et al. (2007). They added that the use of higher frequencies should minimize tidal volume and might thereby reduce ventilator-associated lung injury. In this research, it is clear that the limitation of a HFOV ventilator to measure Vt forced the researchers to use other means (PaCO2 and frequency) to estimate the delivered Vt, which could be affected by other physiological changes.

Even though HFOV has proven to be a successful rescue ventilation method for adult patients with ARDS, there is a lack of systematic studies on its ability to deliver the required lung protecting ventilation. In the adult population, there have been few studies conducted on humans that investigate the delivered Vt with HFOV. One recent study did explore how ventilator variables (frequency, pressure amplitude, CDP, I:E ratio, and bias

flow) and one patient variable (compliance) affect tidal volume during HFOV (Hager et al., 2007). Researchers in this study measured the tidal volumes in test lung and adult patients with ARDS. The study concluded that tidal volume is not consistently small during HFOV and that frequency is the primary determinant of tidal volume in adults with ARDS during HFOV with the Sensormedics 3100B. Test lung findings from the same study suggest that ETT internal diameter is also an important determinant of tidal volume. The Hager et al. study observed the effect of the ETT's internal diameter on the delivered Vt but provided no information on airway resistance.

HFOV Vt Stability:

HFOV is not a volume controlled ventilator. Therefore, the HFOV delivered Vt may be lower than the dead space volume, but the Vt is not constant. Theoretically, the active inhalation and exhalation carried out by HFOV will prevent air trapping in the lungs which could be caused by the rapid respiratory rates used for HFOV. But that hypothesis does not take into consideration the overtime variation of airways resistance. Due to the lower viscosity of a helium-oxygen gas mixture, it is used for patients who have airway resistance complications. The helium-oxygen gas mixture is also used in studies to assess the affect of airway resistance on the delivered Vt.

Winters, Willing, and Sanfilippo (2000) conducted a small case study series on five patients with hypoxemic respiratory failure who developed persistent respiratory acidosis during treatment with HFOV in order to examine the effect of using a helium-oxygen gas mixture on the patients. The authors reported that using a helium-oxygen gas

mixture as a substitute for a nitrogen-oxygen gas mixture during HFOV, improves ventilation levels (PaCO2 removal). Arterial blood gas values (pH, PaCO2, and PaO2) were compared in those patients, during both gases mixtures. Results revealed an initial 24% decrease in PaCO2 and an ultimate 43% decrease in PaCO2. The authors related the PaCO2 improvement to improved gas flow properties as well as to increased PaCO2 diffusion resulting from helium's low-mass density. Though this study was conducted on a very small group (n=5) and was not a randomized trial, it raises a very important question: is the Vt delivered with HFOV stable?

A 2003 study answered this question. A randomized, crossover trial compared the effect of using HFOV with a helium-oxygen gas mixture or with an oxygen-nitrogen gas mixture on gas exchange in a ten swine (4.4 - 5.4 kg) model with acute lung injury (Katz, Gentile, Craig, Quick, & Cheifetz, 2003). To control the Vt, the continuous distending pressure (CDP) was kept at 16.8 +/- 0.3 cm H2O and frequency at 10 Hz, and the oscillation amplitude was adjusted to maintain constant Vt delivery. The Vt was measured by respiratory inductive Plethysmography, and gas exchange was assessed by arterial blood-gas analysis after ventilation with each gas mixture. The authors confirmed that there were no significant differences in PaCO2 or PaO2 between the two gas mixtures. They concluded that if delivered Vt is constant, the use of a helium-oxygen gas mixture does not alter gas exchange when compared with oxygen-enriched air.

Before changing the HFOV settings, Katz et al. (2003) delivered larger Vt when helium-oxygen gas mixture was used. Lesser amplitude was required for the helium-

oxygen gas mixture to deliver the same volume as the oxygen-nitrogen gas mixture. There was an apparent decrease in the airway resistance with the helium-oxygen gas mixture. This study provided supporting evidence that when the friction between airway walls and the gas used with HFOV is reduced, as is the case with the helium-oxygen gas mixture, more Vt will be delivered to the lung, as can be seen by the level of PaCO2 removal.

The study question, how does alteration in Raw affect delivered Vt in adult patients receiving HFOV?- focused the review of literature on few related points. The findings of the literature review were as follow; first, to operate the Sensormedics 3100B HFOV for adult patients, bias flow, mPaw, and frequency should be set at a level that would deliver large Vt. Second, in some studies the use of HFOV demonstrated some success in adult populations. Whereas, other studies indicated that HFOV therapy in adults with ARDS has limited support. Third, Vt can be measured during HFOV using various devices, but some of the suggested devices require calibration to the frequency of the HFOV. Finally, HFOV delivered Vt is not stable and could be influenced by other variables like; frequency, HFOV dynamic properties, ETT size, lung compliance, and type of the gas used.

Much of the information on the physiological effects and delivered Vt of high-frequency oscillation has been obtained through animal studies. Few studies have been conducted on humans. Further investigations are needed to produce outcomes that can then be used in clinical settings. Delivered tidal volume by HFOV is not constant due to

many factors, some of them related to the patient's condition, and others related to the ventilator and the type of gas used.

CHAPTER III

RESEARCH METHODS

Lung Model:

In this study, an-in vitro model was used to simulate an adult passive patient with ARDS using a breathing simulator, Active Servo Lung (ASL) 5000 (Ingmar Medical, Pittsburgh, PA, USA). The ASL 5000 was digitally controlled, by software on host computer and is a piston-driven, real-time breathing simulator generated various types of breath, including that of a passive patient (Appendix-A).

Ventilator:

This study also used a Sensormedics 3100B (Sensormedics, Loma Linda, CA, USA) ventilator with a standard HFOV adult circuit and a cuffed endotracheal tube size 8.0 mm internal diameter (I.D.) (Portex, Hythe Kent, England). The 3100B's HFOV parameters were set for adult patients with ARDS according to the guidelines in Fessler et al. (2007). These guidelines were implemented to direct routine clinical care for clinicians operating HFOV. Researchers in that study recommended the guidelines to optimize the lung protective characteristics of HFOV. In this study, throughout the experiment, the 3100B ventilator was run continuously at pressure amplitude (delta-P) of 80 cm H2O, at 33% inspiratory time (I-time), at frequency (f) of 5 Hz, at mean airway pressure (mPaw) of 35 cm H2O, at bias flow (BF) of 30 L/min, and at 50% oxygen (Appendix - A).

Protocol:

In order to mimic adult patients with severe ARDS on HFOV (during which the patient is fully sedated and immobilized), the ASL 5000 scenario of an adult passive patient with changeable resistance (Raw) and compliance (CL) was selected for each lung. The resistances for upper and lower airways were set during the experiment at the different levels (15, 30, and 45 cm H2O/L/sec) and CL was fixed at 40 mL/cm H2O (Appendix-A).

The 3100B ventilator was calibrated, and then set to deliver mPaw of 35 cm H2O, delta-P of 80 cm H2O, at 33% I-time, at f of 5 Hz, at BF of 30 L/min, and at 50% O2. The ASL 5000 was connected to the ventilator (Figure 1) with a standard high-frequency breathing circuit and size 8.0 mm I.D. cuffed ETT. The ASL 5000 was connected to the software host computer via Ethernet cable. Flow and mPaw were measured inside the test lung and recorded by the software on the host computer. For each level of resistance the HFOV and ASL 5000 were disconnected, turned off, and then restarted again. (Restarting the ASL 5000 is the method recommended in the manual for calibration).

Data Collection:

Vt was measured and recorded three times (n = 3) for each level of Raw. The measurements were taken by ASL 5000 software at the same ventilator settings. Approximately 200-250 breaths of data for each level of Raw were captured via the ASL software and then converted to Excel software for analysis. By reviewing the captured data (Vt waveform on the computer screen), there was a period for the volume to build up inside the ASL 5000 before a steady state was reached (the Vt waveform is stable with no

accelerating increase). After a steady state was established, an average Vt for eighty breaths was recorded and used for the analysis in this study.

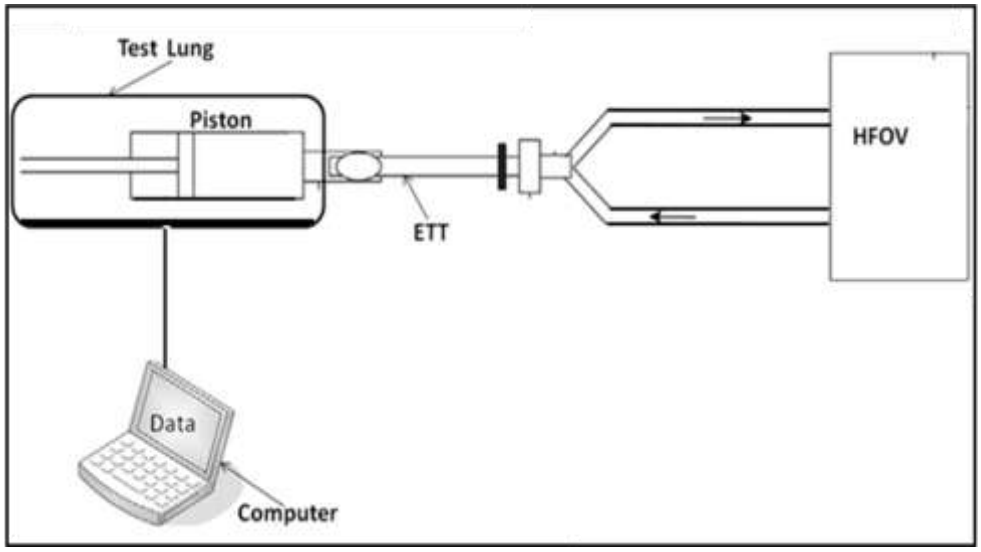

Figure 1. *Schematic Drawing of the Experimental Set-up.*

Data Analysis:

Data was analyzed using SPSS for Windows (Version 15). The data analysis was performed with one-way ANOVA and a post hoc Bonferroni test to determine the statistical significance of the delivered Vt with different Raw. A probability of $p < 0.05$ was accepted as statistically significant.

The research methods were directed by the study question: how does alteration in Raw affect delivered Vt in adult patients receiving HFOV. Sensormidics 3100B ventilator, the only adult patients HFOV in use these days, was used. A lung simulator with the ability to control the Raw, CL, patient size, and measure Vt was used. The software recorded the information and helped to control data collection at a similar level

in all trials. The protocol was aimed to rebate the same conditions during all experiments and eliminate every possible bias.

CHAPTER IV

RESULTS OF THE STUDY

Table 1displays the descriptive statistics of the average delivered Vt with each Raw (15, 30, 45) cm H2O/L/sec used in this study. The table below presents the sample size, Mean Vt, Minimum Vt (Min. Vt), Maximum Vt (Max. Vt), and Standard Deviation (SD). The statistics establish that there was an inverse relationship between tidal volume and airway resistance during HFOV. Specifically, the study found that as the Raw increases the delivered Vt decreases.

Variable Raw (cm H2O/L/sec)	n	Mean Vt (mL)	SD	Min Vt (mL)	Max Vt (mL)
15	3	93.52	1.38	91.97	94.61
30	3	89.09	1.11	88.26	90.35
45	3	85.99	1.10	85.00	87.17

Table 1. *The Descriptive Statistics of the Average Tidal Volume Delivered at Each Airway Resistance.*

The one-way ANOVA test showed that there was a significant difference between the airway resistances used in this study. When the post hoc Bonferroni test was used (Figure 2), the data showed highly statistically significant between airway resistances of 15 cm H2O/L/sec and 30 cm H2O/L/sec and between 15 cm H2O/L/sec and 45 cm H2O/L/sec ($p<0.012$ & $p<0.001$, respectively). However, there was no statistically

significant, but clinically significant, between an airway resistance of 30 cm H2O/L/sec and 45 cm H2O/L/sec (p<0.059).

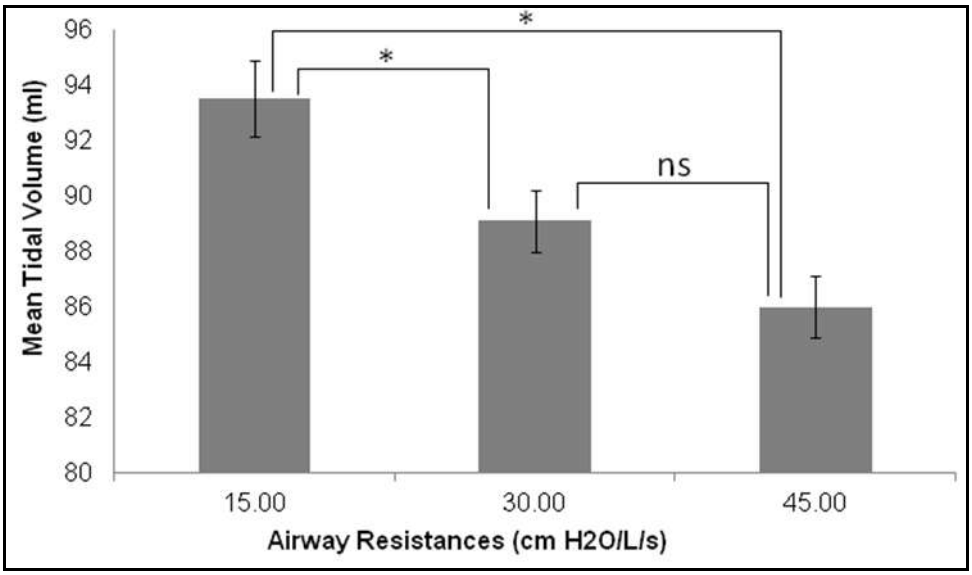

Figure 2. *The Mean Delivered Tidal Volume with the Statistically Significant Differences at Each Level of Airway Resistance.*
*p < 0.05, *ns = No Statistical Significance.*

CHAPTER V

DISCUSSION

The main focus of this study was to evaluate the influence of Raw on the delivered Vt in adult patients with ARDS. The study data suggests that, for a given HFOV setting, any change in airway resistance will have an inverse effect on the delivered Vt. Other studies have examined the effect of other vital variables including HFOV frequency mPaw, ETT size, and lung CL on delivered Vt. Each study showed that its particular variable had a clear effect on delivered Vt, either increasing or decreasing tidal volume (Fessler, Hager, & Brower, 2008; Hager et al., 2007; Niederer et al., 1994). Endotracheal tubes have a fixed resistance, and when the size is reduced – from 8 to 7 or from 7 to 6 mm I.D. – the HFOV Vt will decrease by 15.3% and 18.9%, respectively (Hager et al., 2007). Our study showed similar trend even though the Raw represents the patient's small Raw and it is a dynamic variable. No other study has been conducted to examine how a changeable Raw (i.e., a patient's constantly changing airway resistance) affects Vt.

A reduction in the delivered Vt caused by a sudden decrease in Raw could result in a reduction in the level of gas exchange, especially when Vt drops below the circuit dead space volume (Niederer et al., 1994). Lung protective strategy (LPS), as introduced by ARDSNet (characterized by low Vt with optimal PEEP), is the overall goal for health care providers treating ventilated patients. The important elements of a lung protective strategy are recruitment of the lung and minimization of alveolar overstretching. Even if

HFOV offers the promise of delivering low Vt, it should not be the first choice to provide the LPS, because there is no assurance for a constant delivered Vt. As discussed in the literature review, published studies have found that tidal volume is not constantly small during HFOV (Hager et al., 2007). Our study mainly used ventilator settings similar to that used by Fessler et al. (2007) protocol. The constant ventilator settings did not provide the LPS needed for ventilated patients when the Raw changed.

Even though HFOV Vt is less than anatomical dead space volume, some studies on humans have shown that in certain conditions the Vt can be more than the Vd. The level of end expiratory volume delivered with HFOV (with a high CDP point) may enhance the lungs susceptibility to damage if there is a rapid change to the Vt delivered (e.g., a change in Raw). The results of HFOV studies focusing on Vt could explain the inconsistent results and outcomes from studies with similar settings which did not take Vt into consideration (Mehta et al., 2004; Derdak et al., 2002).

In the routine monitoring of patients receiving HFOV, health care clinicians depend on observations of chest movement, chest radiographs, and trends in PaCO2 level to make appropriate adjustments. The findings of this study and of similar studies, in combination with recent developments in medical equipment, indicate that utilizing a Vt monitor on HFOV is both feasible and necessary. Further, having a Vt monitor could decrease the cost of frequent arterial blood gases and chest radiographs. A Vt monitor could also prevent issues that might lead to lung overstretching and its potentially serious adverse effects on patients.

Limitations of the Study:

In any study one can expect limitations that are outside the control of the researcher. The present study has certain limitations that need to be taken into account when considering the study and its contributions. The following limitations were recognized by the researcher as being possible:

1. In an in-vitro study findings are difficult to generalize for the reason of simulator does not model the actual patient condition.

2. The lung simulator used for the study, according to manufacturer recommendation, prevented the use of humidification system, which is an important part when HVOV is used.

3. Leak presence, and the ability to make a proper seal throughout the circuit was not introduced in the study design, which could explain the deference in the amount of delivered Vt at different Raw settings.

4. Vt in our study was calculated by the ASL 5000 software due to the lack of measuring devices that could validate our results.

Although these limiting factors are considered outside the control of the researcher, it is important to recognize each one in order to effectively evaluate the significance of this study. These limitations decrease full application in clinical setting. Some of these limitations can be seen as fruitful opportunity for future research under the same theme.

Future studies:

Although the observed volume changes in this study may not be exactly what occur clinically, where each patient is unique, the direction and general amount are most likely correct. Further investigation is needed on the influence of other factors on delivered Vt with HFOV. More research is also needed to determine how bronchodilator administration in HFOV patients affects Vt. More randomized control studies should be conducted in order to evaluate all of the factors that could affect HFOV-delivered Vt.

CONCLUSION

The primary focus of this study was to answer the question: how does alteration in Raw affect delivered Vt in adult patients receiving HFOV? The results of the study showed inverse relationship between Raw and HFOV delivered Vt. As the Raw changes the HFOV delivered Vt will change to the opposite direction. The data gathered to answer research questions helped to address the conclusion of the study.

In conclusion, tidal volume is not constant during high frequency oscillatory ventilation. Airway resistance is one of the determinants of Vt in adults with ARDS undergoing HFOV. Raw should be an important factor in ventilator management and clinical experiments of patients on HFOV.

APPENDIX

Appendix - A.

Protocol

High-Frequency & Tidal Volume

Goals:

- To determine the delivered tidal volume (Vt) (past ETT).
- To examine the influence of airway resistance on the delivered Vt (n=3 for each Raw)

Methods:

- For airway resistance 15 cm H2O/L/sec do three trials as follow;

a) Test lung

1. Use ASL 5000 breathing simulator.
2. Connect the simulator ASL 5000 to line power then switch it on.
   i. The Motor red light is enabled.
   ii. Wait for the Motor red light to turn off.
   iii. ASL 5000 is calibrated and ready to be connected to the ventilator and computer.
3. Connect the ASL 5000 to the host PC via Ethernet networking cable.
4. Connect the ASL 5000 with HFOV through standard high-frequency breathing circuit and size 8.0 mm I.D. cuffed ETT.

b) Ventilator

1. Use Sensormedics 3100B (Sensormedics, Loma Linda, CA, USA) (3100B).
2. Calibrate the 3100B ventilator with capped standard high-frequency breathing circuit;
   i. Set bias flow at 30 L/min.

ii. Mean Airway Pressure (mPaw) to maximum.
iii. Pressure amplitude (delta-P) of 60 cm H2O.
iv. Set inspiratory time (I-time) to 33%.
v. Start the 3100B ventilator wait for the mPaw reading to reach between 40 & 45 cm H2O.
vi. 3100B ventilator is ready.

3. Set the 3100B ventilator to the following;
   i. Delta-P of 80 cm H2O.
   ii. Frequency (f) of 5 Hz.
   iii. mPaw of 35 cm H2O.
   iv. BF of 30 L/min.
   v. I-time to 33%.
   vi. Oxygen to 50%.
4. Connect the standard high-frequency breathing circuit and size 8.0 mm I.D. cuffed ETT (Portex, Hythe Kent, England) to the ASL 5000.
5. Go to step (c – 9 – i).

c) <u>Computer</u>

1. After all necessary cable connections have been completed (step a – 3); launch the LabView software on the host PC.
2. Working page (welcome window) is presented;
   i. From welcome window choose “run the software with Ethernet” mode.
   ii. Welcome window will disappear and several windows will be stacking up on computer screen.
   iii. Host computer will attempt to synchronize with the ASL 5000.
   iv. Wait for ASL 5000 response (simulator piston will move).
3. From the “Script Editor window” chose (Adult_apnea.sct) file to edit its model parameter files.

4. From the “Script File” box click two times on the file name (Adult_apnea.sct).
5. A window titled "Step 1: Select Simulation Parameter Set" will open.
    i. Click edit to proceed to the next step.
6. A window titled “step 2: choose a lung model” will open.
    i. Chose the two compartment lung model.
    ii. Set resistance (Raw1) to 15 cm H2O/L/sec.
    iii. Set resistance (Raw2) to 15 cm H2O/L/sec.
    iv. Set compliance (CL1) to 20 mL/cm H2O.
    v. Set compliance (CL2) to 20 mL/cm H2O.
    vi. Click “next”.
7. A window titled “Step 3: Chest Wall Model” will open.
    i. From chest wall model pop-up menu chose passive model.
    ii. Set the passive cycle to 12 breathes per minute.
    iii. Click “next”.
8. A window titled “step 4: save simulation parameter set” will open.
    i. Click “save” to save the new variables in the file.
9. From the “Central Runtime Window” while the ventilator is running and connected to the ASL 5000;
    i. Start the simulation by moving the "slide switch from the “OFF” to the “ON” position.
    ii. From file window chose a name for the data file path to store the data.
    iii. Click “OK”.
10. Go to “Breath Detection / Real-Time Analysis” window.
    i. Check the “save data to high resolution file” checkbox.
    ii. Wait for the data of 250 breaths to be collected.
11. Turn off the simulation by moving the "slide switch from the “ON” to the “OFF” position.

d) Data Collection

1. Launch the Lab VIEW software on the host computer.
2. Go to “post-run” window.
   i. Choose the file to be displayed click it two times.
   ii. Open “multiple parameter trend” from the green box under the “display data” list.
3. Check the Vt waveform to establish the steady state.
   i. The Vt increases gradually to build up the volume in the test lung.
   ii. The steady state is when there is no more increase in the Vt delivered.
4. Review the volume waveform and select 80 breathes from the beginning of a steady state.
5. The average tidal volume for the 80 breaths will be displayed.
6. Record the average tidal volume and use it in data analysis.

- For the airway resistance 30 cm H2O/L/sec do three trials as follow;
  - Repeat the steps a, b, c, and d, but at steps (c – 6 – ii and iii) change the airway resistance to 30 cm H2O/L/sec.

- For the airway resistance 45 cm H2O/L/sec do three trials as follow;
  - Repeat the steps a, b, c, and d, but at steps (c – 6 – ii and iii) change the airway resistance to 45 cm H2O/L/sec.

REFERENCES

Acute Respiratory Distress Syndrome Network (ARDSNet). (2000). Ventilation with lower tidal volumes as compared with traditional tidal volumes for acute lung injury and the acute respiratory distress syndrome. *New England Journal of Medicine, 342,* 1301-1308.

Bollen, C. W., van Well, G. J., Sherry, T., Beale, R. J., Shah, S., Findlay, G., Monchi, M., Chiche, J. D., Weiler, N., Uiterwaal, C. S., & van Vught, A. J. (2005). High frequency oscillatory ventilation compared with conventional mechanical ventilation in adult respiratory distress syndrome: A randomized controlled trial. *Critical Care, 9,* R430-R439.

Bollen, C. W., Uiterwaal, C. S., & van Vught, A. J. (2006). Systematic review of determinants of mortality in high frequency oscillatory ventilation in acute respiratory distress syndrome. *Critical Care, 10,* R34.

Cooper, S. J. (2004). Methods to prevent ventilator-associated lung injury: a summary. *Intensive and Critical Care Nursing, 20,* 358 -65.

Derdak, S., Mehta, S., Stewart, T. E., Smith, T., Rogers, M., Buchman, T. G., Carlin, B, Lowson, S., & Granton, J. (2002). High-frequency oscillatory ventilation for acute respiratory distress syndrome in adults: a randomized, controlled trial. *New England Journal of Medicine, 166,* 801-808.

Dos Santos, C. C., & Slutsky, A. S. (2000). Cellular responses to mechanical stress invited review: Mechanisms of ventilator-induced lung injury: A perspective. *American Physiological Society, 89,* 1645-1655.

Dreyfuss, D., & Saumon, G. (1998). Ventilator-induced lung injury: Lessons from experimental studies. *American Journal of Respiratory and Critical Care Medicine, 157,* 294–323.

Fan, E., & Stewart T. E. (2006). New modalities of mechanical ventilation: high-frequency oscillatory ventilation and airway pressure release ventilation. *Clinical Chest Medicine, 27,* 615–625.

Fessler, H., Derdak, S., Ferguson, N., Hager, D., Kacmarek, R., Thompson, T., & Brower R. (2007). A protocol for high-frequency oscillatory ventilation in adults: Results from a roundtable discussion. *Critical Care Medicine, 35,* 1649-1654.

Fessler, H., Hager, D., & Brower, R. (2008). Feasibility of very high-frequency ventilation in adults with acute respiratory distress syndrome. *Critical Care Medicine, 36*, 1043-1048.

Fessler, H., & Hess, D. (2007). Does high-frequency ventilation offer benefits over conventional ventilation in adult patients with acute respiratory distress syndrome? *Respiratory Care, 52*, 595-605.

Hager, D. N., Fessler, H., Kaczka, D. W., Shanholtz, C. B., Fuld, M. K., Simon, B. A., & Brower R. G. (2007). Tidal volume delivery during high-frequency oscillatory ventilation in adults with acute respiratory distress syndrome. *Critical Care Medicine, 35*, 1522–1529.

Hager, D. N., Fuld, M., Kaczka, D. W., Fessler, H. E., Brower, R. G., & Simon, B. A. (2006). Four methods of measuring tidal volume during high-frequency oscillatory ventilation. *Critical Care Medicine, 34*, 751-757.

Imai, Y., Nakagawa, S., Ito, Y., Kawano, T., Slutsky, A., & Miyasaka, K. (2001). Comparison of lung protection strategies using conventional and high-frequency oscillatory ventilation. *Journal of Applied Physiology, 91*, 1836-1844.

Kallet, R., Campbell, A., Dicker, R., Katz, J., & Mackersie, R. (2005). Work of breathing during lung-protective ventilation in patients with acute lung injury and acute respiratory distress syndrome: A comparison between volume and pressure-regulated breathing modes. *Respiratory Care, 50*, 1623-1631

Katz ,A., Gentile, M., Craig, D., Quick, G., & Cheifetz, I. (2003). Heliox does not affect gas exchange during high-frequency oscillatory ventilation if tidal volume is held constant. *Critical Care Medicine, 31*, 2006-2009.

Mehta, S., Granton, J., MacDonald, R., Bowman, D., Matte-Martyn, A., Bachman, T., Smith, T., & Stewart T. (2004). High-frequency oscillatory ventilation in adults: The Toronto Experience. *Chest, 126*, 518-527.

Niederer, F., Leuthold, R., Bush, H., Spahn, R., & Schmid, R. (1994). High-frequency ventilation: oscillatory dynamics. *Critical Care Medicine, 22*, S58-65.

Pachl, J., Roubik, K., Waldauf, P., Fric, M., & Zabrodsky, V. (2006). Normocapnic high-frequency oscillatory ventilation affects differently extrapulmonary and pulmonary forms of acute respiratory distress syndrome in adults. *Physiological Research, 55*, 15-24.

Ritacca, F., & Stewart, T. (2003). Clinical review: High-frequency oscillatory ventilation in adults — A review of the literature and practical applications. *Critical Care, 7*, 385-390.

Scalfaro, P., Pillow, J. J., Sly, P., & Cotting, J. (2001). Reliable tidal volume estimates at the airway opening with an infant monitor during high-frequency oscillatory ventilation. *Critical Care Medicine, 29*, 1925-1930.

Slutsky, A. S., & Tremblay, L. N. (1998). Multiple system organ failure: is mechanical ventilation a contributing factor? *American Journal of Respiratory and Critical Care Medicine, 157*, 1721–1725.

Soll, R. F. (2006). The clinical impact of high frequency ventilation: review of the Cochrane meta-analyses. *Journal of Perinatology, 26*, S38–S42.

Winters, J., Willing, A., & Sanfilippo, D. (2000). Heliox improves ventilation during high-frequency oscillatory ventilation in pediatric patients. *Pediatric Critical Care Medicine, 1*, 33-37.