Georgia State University
Digital Archive @ GSU

Respiratory Therapy Theses | Department of Respiratory Therapy

9-15-2009

The Effect of Compliance Changes on Delivered Volumes in an Adult Patient Ventilated with High Frequency Oscillatory Ventilation: A Bench Model

John England
england2711@gmail.com

Follow this and additional works at: http://digitalarchive.gsu.edu/rt_theses

Recommended Citation
England, John, "The Effect of Compliance Changes on Delivered Volumes in an Adult Patient Ventilated with High Frequency Oscillatory Ventilation: A Bench Model" (2009). *Respiratory Therapy Theses.* Paper 2.

This Thesis is brought to you for free and open access by the Department of Respiratory Therapy at Digital Archive @ GSU. It has been accepted for inclusion in Respiratory Therapy Theses by an authorized administrator of Digital Archive @ GSU. For more information, please contact digitalarchive@gsu.edu.

ACCEPTANCE

This thesis, THE EFFECT OF LUNG COMPLIANCE CHANGES ON DELIVERED TIDAL VOLUME AND AMPLITUDE IN AN ADULT PATIENT VENTILATED WITH HIGH FREQUENCY OCCILATORY VENTILATION: A BENCH MODEL, by John A. England was prepared under the direction of the Master's Thesis Advisory Committee. It is accepted by the committee members in partial fulfillment of the requirements for the degree Master of Science in the College of Health and Human Sciences, Georgia State University.

The Master's Thesis Advisory Committee, as representatives of the faculty, certify that this thesis has met all standards of excellence and scholarship as determined by the faculty.

_____

Lynda T. Goodfellow, Ed.D. RRT, FAARC

_____

Arzu Ari, Ph.D., RRT

_____

Robert Harwood, MSA, RRT

April 27, 2009

Date

AUTHOR'S STATEMENT

In presenting this thesis as a partial fulfillment of the requirements for the advanced degree from Georgia State University, I agree that the library of Georgia State University shall make it available for inspection and circulation in accordance with its regulations governing materials of this type. I agree that permission to quote, to copy from, or to publish this thesis may be granted by the professor under whose direction it was written, by the College of Health and Human Sciences director of graduate studies and research, or by me. Such quoting, copying, or publishing must be solely for scholarly purposes and will not involve potential financial gain. It is understood that any copying from or publication of this thesis which involves potential financial gain will not be allowed without my written permission.

_____

John A. England

NOTICE TO BORROWERS

All theses deposited in the Georgia State University library must be used in accordance with the stipulations prescribed by the author in the preceding statement. The author of this thesis is:

John A. England

2711 Jims Rd.

Marietta, Georgia 30066

The director of this thesis is:

Lynda T. Goodfellow, Ed.D. RRT, FAARC

College of Health and Human Sciences

Georgia State University

Atlanta, Georgia 30303-3083

Vita

John England MS, RRT

Work Experience

Northside Hospital, Atlanta, Ga. Clinical Evaluator January 1983 – present

Publications and Presentations

Restrepo, R.D., England, J., Restrepo, L. M., (2006) High frequency ventilation, an alternative in the management of patients with gross air leak without chest tube: a case report. *Journal of Respiratory Care and Applied Technology*; 1(1):73.

Abstracts:

A.Ari, EA Aljamhan, R Harwood, J England, JB Fink., (2009) An in-vitro comparison of continuous and drop-by-drop nebulization during pediatric mechanical ventilation. *Journal of Aerosol Medicine and Pulmonary Drug Delivery*; 22(2):174.

A.Ari, EA Aljamhan, R Harwood, J England, JB Fink., (2009) An in-vitro evaluation of aerosol drug delivery with drop-by-drop nebulization in simulated mechanically ventilated pediatrics. *Journal of Aerosol Medicine and Pulmonary Drug Delivery*; 22(2):175.

June 2006 and 2007; Guest lecturer Dobbins Air Force Reserve Medical Flight Wing

Awards

2006 Clinical Instructor Award Georgia State University, Atlanta Georgia

Education

1981	New York University	School of Respiratory Therapy
1987	Kennesaw State University	Bachelor Business Administration
2009	Georgia State University	Master in Health Sciences with a major in Respiratory Therapy

Certifications

Registered Respiratory Therapist, December 1982

Certified Respiratory Therapy Technician, November 1981

Professional Organizations

American Association for Respiratory Care 1984 – present

Georgia Society for Respiratory Care

Abstract

The Effect of Compliance Changes on Delivered Tidal Volumes and Amplitude in an Adult Patient Ventilated with High Frequency Oscillatory Ventilation: A Bench Model

By

John A. England

Clinical concerns exist regarding the delivered tidal volume (Vt) during high-frequency oscillatory ventilation (HFOV). HFOV is increasingly being used as a lung protective mode of ventilation for patients with Adult Respiratory Distress Syndrome (ARDS), but caution must be utilized. The purpose of this study was to investigate the effect of airway compliance on Vt delivered by HFOV to the adult patient.

Method: An in vitro model was used to simulate an adult passive patient with ARDS, using a high fidelity breathing simulator (ASL 5000, IngMar Medical). The simulation included independent lung ventilation with a fixed resistance and adjustable compliance for each lung. Compliances of 10, 15, 20 and 25 ml/cmH_2O were used and resistance (Raw) was fixed at 15 cm H2O/L/s. The ventilator SensorMedics 3100B (Cardinal Health, Dublin, Ohio) was set to a fixed power setting of 6.0, insp-% of 33%, bias flow =30 L/min, and 50% oxygen and Hz of 5.0 (n=5) for each compliance setting. Mean airway pressure (mPaw) and amplitude (AMP) varied as the compliance changes were made. Approximately 250 breaths were recorded at each compliance setting and the data was collected via the host computer and transferred to a log to be analyzed by SPSS v. 10.

Data Analysis: The data analysis was performed using SPSS v. 10 to determine the statistical significance of the delivered Vt with different compliances, different AMP and a fixed power setting. A probability of ($p < 0.05$) was accepted as statistically significant.

Results: The average delivered Vt with each compliance was 124.181 mL (range of 116.4276 mL and 132.6637 mL) and average AMP of 84.85 cm/H_2O (range 82.0 cm/H_2O and 88.0801 cm/H_2O) n=5. There was an inverse relationship between Vt and AMP at a fixed power of 6.0. As compliance improved Vt increased and there was a corresponding decrease in AMP. The one-way ANOVA test showed that there were significant differences between the delivered tidal volume and AMP at a fixed power setting. When the post hoc Bonferroni test was used the data showed significant differences between AMP achieved with each compliance change and a fixed power of 6.0. When the post hoc Bonferroni test was used the data showed significant differences between Vt delivered with each compliance change and a fixed power setting of 6.0.

Conclusion: Vt is not constant during HFOV. Compliance is one determinant of Vt in adults with ARDS during HFOV. AMP and Vt are inversely related during HFOV at a fixed power setting and improving compliance.

THE EFFECT OF LUNG COMPLIANCE CHANGES ON DELIVERED TIDAL VOLUME AND AMPLITUDE IN AN ADULT PATIENT VENTILATED WITH HIGH FREQUENCY OCCILATORY VENTILATION: A BENCH MODEL

By

John A. England

A Thesis

Presented in Partial Fulfillment of Requirements for the

Degree of

Master of Science

in

Health Sciences

in

Division of Respiratory Therapy

in

The College of Health and Human Sciences

Georgia State University

Atlanta, Georgia

2009

ACKNOWLEDGEMENTS

To Lynda T. Goodfellow, Ed.D. RRT, FAARC, many thanks for your encouragement and answering all of my questions. I would not have finished without your assistance.

To Arzu Ari, Ph.D., RRT for helping me learn to write a proper research paper. I want to thank you for helping to make the transition from clinician to academia easier and understanding statistical analysis.

To Douglas S. Gardenhire, MS, RRT you were instrumental in helping me choose to go back to school. Your guidance helping me choose the most efficient and manageable course direction was paramount in my successful completion of my degree. I want to thank you for all of the encouragement you showed me along the way to achieving this goal.

To Robert Harwood, MSA, RRT thank you for allowing me to hone my teaching skills in your classroom as well as your clinical lab.

To my fellow staff at Northside Hospital Atlanta for allowing me the freedom to pursue and complete my degree.

I want to thank my family for their personal sacrifices and encouragement.

Table of Contents

Page

List of Tables…….....iv

List of Figures……...v

Abbreviations……...vi

Chapter I. Introduction.....……..…… 1

Historical Perspective

High Frequency Oscillation Ventilation

Statement of problem

Chapter II. Review of the Literature……7

Introduction

Indications for HFOV

Mechanism of HFOV

Other Uses of HFOV

Chapter III. Research Methods……12

Lung Model

Ventilator

Protocol

Data Collection

Data Analysis

Chapter IV. Results……..15

Chapter V. Discussion……..22

Definitions……25

Appendices..……26

Works Cited……..32

List of Tables

Table 1. Descriptive Statistics volume compared to compliance change

Table 2. Anova table comparing volumes between groups

Table 3. Multiple Comparisons Dependent Variable: Volume Bonferroni Analysis

Table 4. Descriptive Statistics amplitude to compliance change

Table 5. Anova table comparing amplitude between groups

Table 6. Multiple Comparisons Dependent Variable: Amplitude Bonferroni Analysis

Table 7: Pearson Correlation between Amplitude and Tidal Volume

List of Figures

Figure 1. Front Panel of the Model 3100B HFOV

Figure 2. Brief timeline of Premarket Approvals for HFOV

Figure 3. Gas-Transport Mechanisms during High-Frequency Ventilation

Figure 4. Schematic drawing of the experiment set-up

Abbreviations

AMP Amplitude

ARDS Adult Respiratory Distress Syndrome

BF Bias flow

CO_2 Carbon dioxide

CV Conventional ventilation

HFOV High Frequency Oscillation Ventilation

I.D. Internal diameter

FDA Federal Drug Administration

FRC Functional Residual Capacity

FiO_2 Fraction of Inspired Oxygen

mPaw Mean Airway Pressure

O_2 Oxygen

PEEP Positive End Expiratory Pressure

PMA Premarket Approval

VILI Ventilator Induced Lung Injury

Vt Tidal Volume

Chapter I

Introduction

Historical Perspective

The field of respiratory care a relative new comer in the world of modern medicine. In 1947 the predecessor of the present day American Association for Respiratory Care (AARC) was chartered in the State of Illinois and called Inhalation Therapy Association. The role of the respiratory therapist has changed also from its modest beginnings of setting up simple oxygen (O_2) devices and cylinders in 1947 to being recognized as healthcare professionals charged with the responsibility of maintaining the 26 week gestational age, 500 gram neonate to the adult patient in respiratory failure on conventional and non-conventional ventilation. Present day therapists are considered experts in many areas but especially ventilator management. They are also becoming actively involved in relevant and timely research.

High Frequency Oscillation Ventilation

One innovation in respiratory care is High Frequency Oscillatory Ventilation (HFOV). HFOV is described as a ventilator that delivers a rate greater than 150 breaths a minute. HFOV achieves gas transport with stroke volumes approximating anatomic dead space and HFOV can be viewed as a mixing device that rapidly blends high O_2/low carbon dioxide (CO_2) gas from the top of the endotracheal tube with gas in the alveoli. Net transport occurs along the partial pressure gradients for O_2 and CO_2, with CO_2 moving out of the lung along its partial gradient and O_2 moving inward to the alveolar capillary interface. These flow oscillations cause symmetric oscillations of intrapulmonary pressure around a mean distending airway pressure (Tobin, 2006).

According to the manufacturer, oxygenation and ventilation are considered mutually exclusive. Oxygenation is achieved by the mean airway pressure (mPaw) delivered by the oscillator or the FiO_2. Ventilation is primarily determined by the stroke volume of the device. Stroke volume is determined by the Delta-P of the frequency. Figure 1 is a representation of the front panel of the 3100 B HFOV.

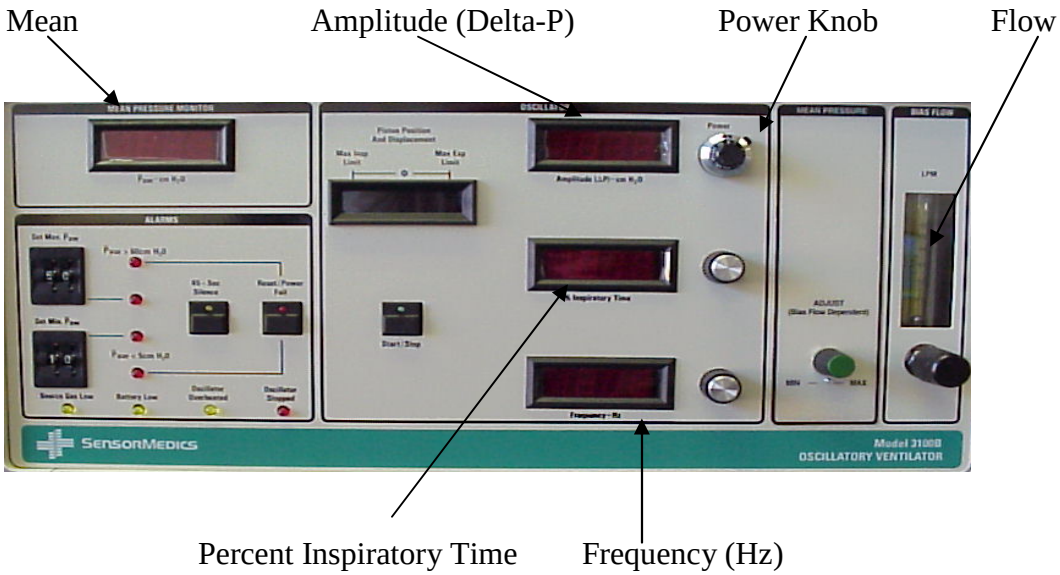

Figure 1. Front Panel of the Model 3100B HFOV. Reprinted with permission by Cardinal Health Inc. 2009

HFOV produces a waveform similar to a sine wave. The amplitude (AMP) of the wave is determined by the power setting of the vent. The power setting also determines the forward and backward motion of the piston which helps determine tidal volume. Mean airway pressure is generated by a continuous flow of gas past a variable resistance mushroom valve located on the expiratory limb of the patient's circuit (Pilbeam & Cairo, 2006).

A brief timeline of Premarket Approvals (PMA) is provided for FDA approval in the use of HFOV in the adult patient with Adult Respiratory Distress Syndrome (ARDS).

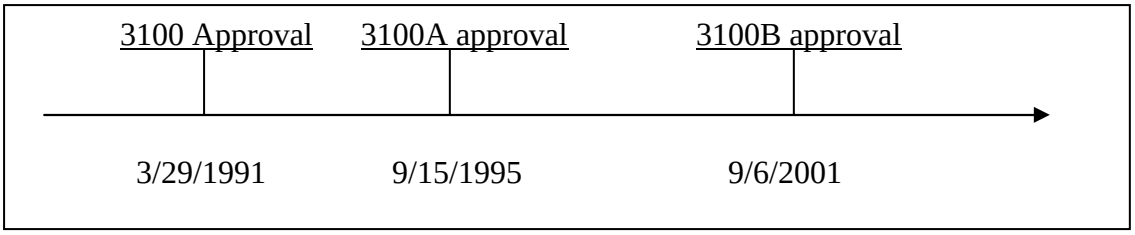

Figure 2. Brief timeline of Premarket Approvals for HFOV

On March 29, 1991, a PMA was approved for the SensorMedic 3100 High Frequency Oscillatory Ventilator (Cardinal Health, Dublin, Ohio) for the treatment of neonates with respiratory failure and barotrauma. On September 15, 1995, a PMA supplement was issued expanding the indications for use of the Model 3100A to include certain pediatric patients who were failing conventional ventilation. On September 6, 2001 the FDA approved a PMA for the use of the Model 3100B for the ventilatory support and treatment of selected patients 35 kilograms or greater in acute respiratory failure (Summary, p890057s, p7).

Figure 3 is an introduction to the major gas transport mechanisms under physiologic conditions during HFOV. The major mechanisms of gas transport and exchange include: Taylor Dispersion, gas on inspiration will travel down the center of the airway and expired gas will travel along the walls of the airway, Pendeluft movement of gas, because of the differences in compliance and resistance lung areas flow will go to the areas of the lunge with the greatest compliance and least resistance. There is also a component bulk movement of gas similar to conventional ventilation.

The major gas-transport mechanisms that are operative under physiologic conditions in each region (convection, convection and diffusion, and diffusion alone) are shown in figure 3. There are seven potential mechanisms that can enhance gas transport during high-frequency ventilation: turbulence in the large airways, causing enhanced mixing; direct ventilation of close alveoli; turbulent flow with lateral convective mixing; pendelluft (asynchronous flow among alveoli due to asymmetries in airflow impedance); gas mixing due to velocity profiles that are axially asymmetric (leading to the streaming of "fresh" gas toward the alveoli along the inner wall of the airway and the streaming of "alveolar" gas away from the alveoli along the outer wall); laminar flow with lateral transport by diffusion (Taylor dispersion); and collateral ventilation through nonairway connections between neighboring alveoli (Slutsky & Drazen, 2002).

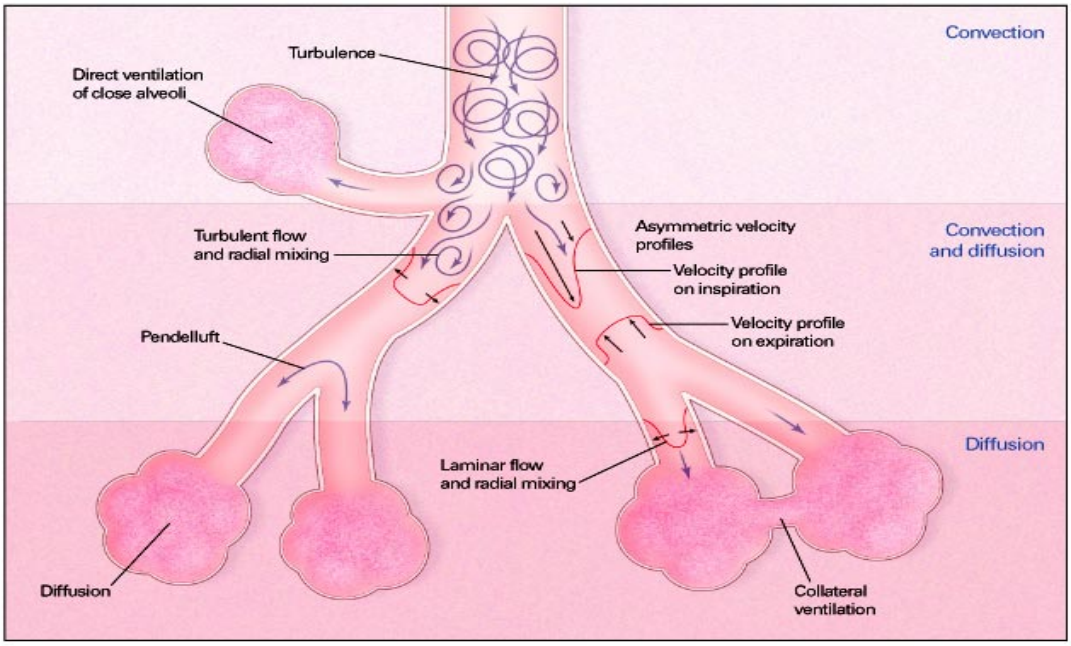

Figure 3. Gas-Transport Mechanisms during High-Frequency Ventilation *Slutsky A and Drazen J. N Engl J Med 2002; 347:630-631 reprinted with permission by The New England Journal of Medicine 2009*

Fan and Stewart's (2000) article supported the use of lower tidal volumes to prevent lung injury and lower the incidence of mortality and reduce the number of conventional ventilatory days. This technique has been used since 2001 for the treatment of ARDS in the adult ICU population. The benefits of HFOV in the adult patient is supported by the ARDSNet protocol of using small tidal volumes to ventilate a patient with the clinical result of less barotrauma to the patient (Fan & Stewart, 2006).

Statement of problem

Clinical practitioners have consistently observed that over the first forty-eight to seventy-two hours of initiating the use of HFOV in the adult patient the mPaw and the AMP will spontaneously drop. This will happen without any intervention on the part of the clinicians taking care of the patient. The power setting (driving the AMP) and the flow will remain as originally set. Currently, the reason for this decrease in pressure is not known; therefore, the purpose of this bench study is to determine if improvement in the patient's compliance results in a change in the volume delivered with each stroke of the piston.

This is important from a clinician's perspective. If you increase the driving pressure to its original setting and the tidal volume increases, then are you putting the patient at higher risk of developing barotrauma, lung damage including a pneumothorax because of the increased tidal volume? From a retrospective chart review of the management of patients on HFOV at a local area hospital, it was learned that patients who had their AMP and mPaw returned to the original settings suffered a larger number of pneumothoraces than patients that were not returned to their original setting. This led to the following research question: Is there a direct correlation with the AMP and Vt changing while on HFOV and the tidal volume delivered to the test lung? By knowing the answer to this question the therapist will be able to provide safer care to the patient. The realization that the patient's lung compliance is changing for the better, the therapist will not return the ventilator to its original settings, thus preventing a possible pneumothorax by delivering a larger volume then needed. This could lead to

transitioning back to conventional ventilation sooner and possibly a shorter ICU stay for the patient. This could possibly reduce the total cost of the patient's hospital stay. A shorter hospital stay reduces the patient's risk of a nosocomial infection which is a complication of hospital care.

This chapter describes the role of the respiratory therapist in one aspect of critical care: the management of HFOV and the importance of an astute respiratory therapist with the understanding of how HFOV is assumed to work and the relevance of the values reported on the oscillator. The understanding of the relationship of Vt and lung compliance to the spontaneous drop in AMP will provide safer environment for the patient.

Chapter II

Review of the Literature

Introduction

This literature review will cover the topics of HFOV as it relates to its uses and benefits to the adult patient. Sources cited come from a variety of scholarly medical journals using CINAHL Plus with Full Text: Nursing and Allied Health (at EBSCOhost), MEDLINE with full text (at EBSCOhost) and PubMed databases. The reviews were collected using the terms high frequency oscillatory ventilation and compliance changes using HFOV as it pertains to the adult patient. Very few articles pertaining to HFOV and the adult patient were found. This review is reflective of current ventilatory strategies utilizing HFOV.

Indications for HFOV

There are few articles that describe the indications for HFOV in the adult patient; five of these articles are summarized for this review.

Cartotto et al. (2005) article "studied 25 burn patients with 24 of them meeting the criteria for ARDS". ARDS has an acute onset and occurs from a loss of surfactant due to the leakage of proteinaceous fluid into the pulmonary interstitium and alveoli causing a loss of surfactant reducing the compliance in the lungs. There is a heterogeneous appearance on a chest X-ray. Pulmonary artery pressure will usually be less than 18 mmHg, if the patient does not have a pulmonary arterial catheter in place the patient will not be showing signs of left heart failure. The patients in Cartotto's study had a PaO_2/FiO_2 (PF) ratio of 98 ± 26. A PF ratio of ≤ 300mmHg is by definition Acute Lung

Injury (ALI) and a PF ratio of ≤ 200 is considered ARDS. Oxygen index (OI) (FiO_2 X MAP X 100/PaO_2) of 27 ± 10 just prior to initiating HFOV. Six of the patients were receiving inhaled nitric oxide (iNO) at a level of 16 ± 6 ppm. Within one hour there was a sustained increase in the P/F ratio and within 48 hours a continual decrease in the OI. All of the patients receiving iNO were weaned off within 24 hours of starting HFOV. HFOV was maintained for 6.1 ± 5.8 days (range of 2 hrs to 26 days). Seven patients died, their underlying cause was sepsis with multiple organ failure. The 18 survivors were converted back to controlled mandatory ventilation at a FiO_2 of .40 ± 0.1 and a mPaw of 24.4 ± 4.0 cm H_2O.

Chan et al. (2005) wrote a literature review from articles written between 1980 to 2004 on HFOV. Chan reviewed eight clinical trials of various methodological designs. All of these studies showed that HFOV lead to an improvement in oxygenation. Chan also reported that refractory oxygenation can improve with the utilization of HFOV and iNO. He concluded that HFOV can be a safe and effective mode of ventilation in the adult patient with ARDS. Earlier intervention of HFOV is a recommendation of his literature review.

Imai et al.'s (2005) article reviewed several studies using small animal models and the effects of HFOV on lung damage. The animals had lung damage induced by lung lavage to cause a low surfactant state. It was concluded in this article that HFOV can reduce ventilator induced lung injury (VILI) compared with conventional ventilator strategies. However, early neonatal studies did not support this conclusion (The HIFI study Group, 1989). The use of lung recruitment measures in the neonate did show an overall improvement in gas exchange. The author concluded that there is convincing

animal data supporting the use of lung protective strategies such as HFOV in the adult patient.

Venegas et al. (1991) concluded that as tidal volume increases, gas transport changes from inefficient dispersion to more efficient bulk movement of gas, with regional tidal volume to dead space ratios. These findings are consistent with other large animal studies. This review showed that gas exchange mechanisms during HFOV are accomplished by laminar flow, turbulent dispersions, mixing due to asymmetrical velocity profiles, and pendelluft breathing. These results were accomplished by using large animal experimentation.

Bollen et al. (2005) compared the safety and efficacy of HFOV with conventional ventilation (CV) for early intervention of adult respiratory distress syndrome (ARDS). A randomized trial in four intensive care units was conducted. The patients were randomized to receive either conventional ventilation or HFOV. The trial was stopped early because of a low inclusion rate (61 patients) and the completion of another trial comparing HFOV and conventional ventilation but did conclude that in patients with ARDS with higher baseline OI might benefit from HFOV.

Mechanism of HFOV

The mechanism of how HFOV works is not fully understood. The following articles will discuss some of the most current ideas.

Pillow's (2005) article collected data from studies indexed in PubMed illustrating key concepts relevant to pressure transmission in the adult lung using a published theoretical model. The article reviewed the mechanisms of gas exchange and transport during HFOV. Gas transport during HFOV is accomplished through bulk movement of gas, diffusion, convection, pendelluft and cardiac mixing and the roles they play in gas exchange. The article also

introduced the bifurcation phenomenon and how gas streams fresh gas towards the alveoli along the inner airways while “alveolar” gas is streamed away from the alveoli along the outer wall.

This phenomenon plays an important role in the longitudinal convective transport mechanism during HFOV. The author concluded that the clinician needs to be aware that HFOV adds a complexity that conventional ventilation lacks. The changes in compliance and resistance of the patient and how these will influence clinical decisions at different frequencies, flow and pressure transmitted to the lung must be understood. Clinicians must understand how drops in mean airway pressure across the endotracheal tube could be altered by changing the frequency, internal diameter of the endotracheal tube, and ventilator amplitude.

Carney et al. (2005) reviewed original published articles and review papers dealing with the mechanism of lung volume changes at the alveolar level. The authors explain that it has been suggested that the lung volumes change by alveolar recruitment and derecruitment. This postulate suggests that the alveolus do not change size during ventilation. Smaldone et al. (1983) demonstrated in their in vivo studies that the normal lung changes volume by alveolar recruitment and derecruitment. The author also stated that data from their own laboratory suggests that normal alveoli do not change size during ventilation. Also, they found that large changes in alveolar size and widespread alveolar recruitment and derecruitment appear dominant in acute lung injury. Tremblay et al. (1997) demonstrated that ventilating normal excised lungs with very high inspiratory pressure and low positive end expiratory pressure (PEEP) caused injury demonstrated by the release of inflammatory cytokines. Carney et al. (2005) also states that unstable alveoli that open and close with each breath can cause a significant shear stress lung injury. This study concluded that ventilator maneuvers that stabilize the alveolus such as PEEP and HFOV may help to reduce the incidence of VILI.

Other Uses of HFOV

Cartotto et al.'s (2005) article suggests a way that his team transported burn patients to the operating room (OR). It consisted of clamping the patient's ET tube to maintain FRC and switching to a manual resuscitator with 20 cm H2O PEEP. During the transport the patient would then be given quick small breaths with a resuscitation bag. Prior to reinitiating HFOV in the OR, a recruitment maneuver would be performed and oscillation then would be started. Cartotto's team has transported 18 patients requiring surgery to the OR. His conclusion is that HFOV was useful in the transporting of burn patients with ARDS. The author suggests that further randomized clinical trials are needed to assess the usefulness of HFOV.

This review of the preceding three categories: indications for HFOV, mechanism of HFOV and other uses demonstrates the general lack of published clinical guidance for the bedside clinician as it pertains to HFOV. More research is needed to fully understand HFOV, and to give guidance to the bedside clinician. The purpose of my study was to help the clinician to better understand the relationship between changing lung compliance and delivered tidal volumes in the use of HFOV.

Chapter III

RESEARCH METHODS

Lung Model

An in vitro model was used to simulate the adult patient with ARDS using a high fidelity breathing simulator (Active Servo Lung (ASL) 5000, Ingmar Medical, Pittsburgh, PA, USA) to answer the following question: does changing lung compliance change the volume delivered to a patient on HFOV. The ASL 5000 is digitally controlled, and is piston-driven simulating real time breathing.

Ventilator Settings

The SensorMedics 3100B ventilator was used with a standard HFOV adult circuit and a cuffed endotracheal tube size 8.0 mm internal diameter (I.D.) (Portex). The 3100B HFOV parameters were set for an adult patient with ARDS according to Fessler et al., (2007) guidelines. Fessler et al., (2007) recommended the guidelines to optimize the lung protective characteristics of HFOV. The 3100B ventilator was set at a power of 6, 33% inspiratory time (Ti), frequency (f) of 5 Hz, mPaw varied to reflect the compliance that was set on the ASL 5000, bias flow (BF) of 30 L/min and 50% oxygen.

Protocol

To simulate an adult patient with severe ARDS on HFOV the ASL 5000 scenario of an adult passive patient with changeable compliance and fixed resistance (Raw) for each lung was varied at the following settings; the resistance was set during the experiment at 15cm H2O/L/s and the compliance was 10, 15, 20 and 25 mL/cm H2O (Protocol is included in Appendix A).

The 3100B ventilator circuit was calibrated then set to the previous mentioned settings. The ASL 5000 was connected to the ventilator (Figure 4) with a standard high-frequency breathing circuit and size 8.0 mm I.D. cuffed ETT. The ASL 5000 was connected to the software host computer via Ethernet cable. Vt and total delivered number of breaths were measured inside the test lung and recorded by the software host computer.

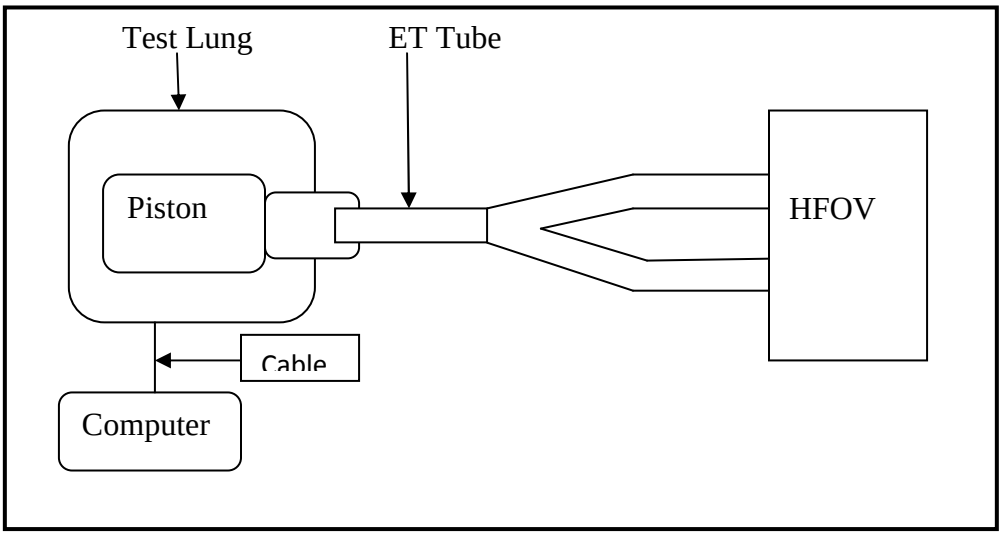

Figure 4. Schematic drawing of the experiment set-up

Data Collection

Vt was measured and recorded five times (n = 5) for each level of compliance. The measuring was done by ASL 5000 software at the same ventilator settings. Approximately 250 breaths of data for each level of compliance was captured via the ASL software and the volume of the 250th breath was recorded to be used in the analysis. The number of breaths (250) was determined graphically; this is where the volume delivered to the lung to plateau. This value is felt to be more reflective of what happens physiologically in the lung then taking an average of the 250 breaths, because the drop in AMP happens once a steady state is reached in the lung. By reviewing the captured data Vt and amplitude was recorded and analyzed.

Data Analysis: The data analysis was performed using SPSS v. 16 one way ANOVA, post hoc Bonferroni, descriptive statistics, Post hoc comparison and Pearson correlation test to determine the statistical significance of the delivered Vt and AMP measurements with different compliance settings. A probability of ($p < 0.05$) was accepted as statistically significant.

In summary, this chapter described the methods used to investigate the relationship between changing lung compliance and delivered tidal volumes in the use of HFOV. Data was collected using the 3100B connected to a simulator and analyzed using SPSS v.16.

Chapter IV

Results

The data outlined in this chapter are provided to assist in answering the following question: is there an effect on volumes delivered in an adult patient ventilated with HFOV as lung compliance change. For each trial an average of 250 breaths were delivered by the 3100 B ventilator, the power was fixed at 6.0, the flow was set at 30 lpm and the Hz was set at 5.0. The following tables reflect the statistical analysis for the change in volume as the compliance is varied:

Tidal Volume as it Relates to Compliance

Table 2 reflects the descriptive statistical analysis of the four compliance settings as compared to the volume delivered. The mean volumes increase as the compliance improves and the power driving the piston remains constant.

Table 1. Descriptive Statistics volume compared to compliance change

Compliance	n	Mean	Std. Deviation	Minimum	Maximum
10 mL/cmH_2O	5	117.6380	0.97482	116.36	118.87
15 mL/cmH_20	5	121.7260	1.46290	119.64	123.42
20 mL/cmH_2O	5	125.2420	1.49224	123.58	126.99
25 mL/cmH_2O	5	132.1180	0.43951	131.68	132.85
Total	20	124.1810	5.55754	116.36	132.85

The one way ANOVA (Table 3) test showed that there was a significant difference between delivered tidal volumes and improving compliance at a fixed power setting.

Table 2. Anova table comparing volumes between groups

	Mean Square	F	Sig.
Between Groups	188.266	136.665	0.000
Within Groups	1.378		

When the post hoc Bonferroni test (Table 4) was run, it showed specifically that as each level of compliance was manipulated the tidal volume was directly related to it. These measurements were performed at a power setting of 6.0.

Table 3. Multiple Comparisons Dependent Variable: Volume Bonferroni Analysis

(I) Compliance	(J) Compliance	Mean Difference (I-J)	Std. Error	Sig.	95% Confidence Interval
10	15	-4.08800	0.74231	0.00*	
	20	-7.60400	0.74231	0.00*	
	25	-14.48000	0.74231	0.00*	
15	10	4.08800	0.74231	0.00*	
	20	-3.51600	0.74231	0.00*	
	25	-10.39200	0.74231	0.00*	
20	10	7.60400	0.74231	0.00*	
	15	3.51600	0.74231	0.00*	
	20	-6.87600	0.74231	0.00*	
25	10	14.48000	0.74231	0.00*	
	15	10.39200	0.74231	0.00*	
	20	6.87600	0.74231	0.00*	

Compliance = mL/cmH_2O

* The mean difference is significant at the 0.05 level.

Amplitude as it Relates to Compliance

For each trial an average of 250 breaths was delivered by the 3100 B ventilator, the power was fixed at 6.0, the flow was set at 30 lpm and the Hz was set at 5.0. The following table reflects the descriptive statistics for the change in amplitude as the compliance is varied. An average of 250 breaths was used as the target number of breaths, because this was reflective of a steady state tidal volume delivered by the ventilator, as reflected by the reading on the simulator.

Table 5 reflects the descriptive statistical analysis of the four compliance settings as compared to the measured amplitude. The mean amplitude decreases as the compliance improves and the power driving the piston remains constant.

Table 4. Descriptive Statistics amplitude to compliance change

	n	Mean	Std. Deviation	Minimum	Maximum
10 mL/cmH_2O	5	87.4000	0.54772	87.00	88.00
15 mL/cmH_20	5	86.0000	0.00000	86.00	86.00
20 mL/cmH_2O	5	84.0000	0.00000	84.00	84.00
25 mL/cmH_2O	5	82.0000	0.00000	82.00	82.00
Total	20	84.8500	2.10950	82.00	88.00

The one way ANOVA test (Table 6) showed that there was a significant difference between measured amplitude and improving compliance at a fixed power setting.

Table 5. Anova table comparing amplitude between groups

	Mean Square	F	Sig.
Between Groups	27.783	370.444	0.00
Within Groups	0.075		

When the post hoc Bonferroni test (Table 7) was performed, it showed specifically as each level of compliance was manipulated the amplitude was directly related to it. These measurements were all conducted at a power setting of 6.0.

Table 6. Multiple Comparisons Dependent Variable: Amplitude Bonferroni Analysis

(I) Compliance	(J) Compliance	Mean Difference (I-J)	Std. Error	Sig.	95% Confidence Interval
10	15	1.40000	0.17321	0.000*	
	20	3.40000	0.17321	0.000*	
	25	5.40000	0.17321	0.000*	
15	10	-1.40000	0.17321	0.000*	
	20	2.00000	0.17321	0.000*	
	25	4.00000	0.17321	0.000*	
20	10	-3.40000	0.17321	0.000*	
	15	-2.00000	0.17321	0.000*	
	25	2.00000	0.17321	0.000*	
25	10	-5.40000	0.17321	0.000*	
	15	-4.00000	0.17321	0.000*	
	20	- 2.00000	0.17321	0.000*	

Compliance = mL/cmH_2O

*The mean difference is significant at the 0.05 level.

When Pearson correlation was performed, it showed a significant inverse correlation between amplitude and tidal volume. These measurements were all conducted at a power setting of 6.0.

Table 7: Pearson Correlation between Amplitude and Tidal Volume

Correlations

		AMPS	VOL
VOL	Pearson Correlation	-.969	1
	Sig.	.000	.
	N	20	20

** Correlation is significant at the 0.01

In summary the research question was answered; the spontaneous reduction of amplitude is indicative of improving compliance. As also shown by this study it is an inverse relationship. As amplitude decreased, tidal volume increased. Therefore, clinicians caring for the patient should be aware of possible physiologic changes to the patient.

Chapter V

Discussion

This chapter is a discussion of how lung compliance changes effect delivered tidal volume during HFOV. According to this study during HFOV as lung compliance improves, AMP will drop and Vt will increase. With this knowledge clinicians can treat their patients safer by decreasing length of stay on a ventilator.

In clinical practice it has been observed that the amplitude and mean airway pressure will decrease, as measured by the ventilator, usually within the first 48 to 72 hours. This happens with no change to the power setting driving the piston. As demonstrated by this study; as lung compliance improves, tidal volume will increase and amplitude will decrease with no change in the power setting. Extrapolating upon this data, if the clinician were to increase the power to the piston to achieve the original amplitude the tidal volume delivered from the ventilator will increase. This will be detrimental to the patient for two clinical reasons. First, the current treatment of ARDS is low tidal volume, high PEEP and lower alveolar pressures. If adequate volume can be maintained at lower ventilating pressures; there is no reason for a clinician to potentially cause further pulmonary barotrauma by increasing the volume delivered by increasing the power setting to achieve the original amplitude. Secondly, because the patient's lung is non-compliant, increasing the power (amplitude) and correspondingly the tidal volume, the clinician puts the patient at risk for developing a pneumothorax. Even though it appears to be an insignificant increase in Vt 14 mL from the least compliant to the most

compliant this number is equivalent to a minute volume of 5.2 L which is a significant increase and could potentially be detrimental to the patient.

There are limitations to the generalizations of this study. It was a bench study and this may not be what happens physiologically to the patient but the results are believed to be reflective of what happens in clinical practice. The gas delivered to the ASL 5000 was not heated or humidified, as recommended by the manufacturer to prevent damage to the ASL 5000. This is not reflective of what happens in clinical practice. In clinical practice, any time a patient is placed on HFOV the gas being delivered to the patient will be heated and humidified. The number of trials was small in number but sufficient to support what happens in clinical practice. In clinical practice, amplitude will decrease as lung compliance improves and as reflected by this bench study, amplitude did decrease spontaneously with improving compliance. This resulted in an increase in delivered tidal volume. The fact that this bench study does not necessarily reflects what happens to a patient on HFOV makes this a shortcoming.

A question that has also frustrated clinicians is: Many patients who are placed on HFOV are refractory to oxygenation and in attempt to reverse this condition iNO is initiated shortly after HFOV with little or no success. But if iNO were to be reinstated 24 to 48 hours later will there be an improvement in oxygenation? For iNO to be effective it must travel through the alveolus into the vasculature causing smooth muscle relaxation and arteriolar dilation (INOmax). As demonstrated by this study, as compliance of the lung improves, as seen by a decrease in amplitude and an increase in tidal volume, does this then reflect an increase in the functional residual capacity of the patient allowing more alveolar surface area for iNO to travel into the vasculature? In clinical practice iNO

is used in the premature infant for refractory hypoxemia. Institutions that use iNO in their NICUs also use iNO with their adult patients and found an increase in the reversal of hypoxemia and pulmonary hypertension. Building upon these clinical observations, iNO has made its way into the adult ICU even though it is considered off label in many instances. To build upon this study a follow up survey of users of HFOV and their success in reversing refractory hypoxemia using iNO and HFOV versus conventional ventilation should be investigated.

The use of HFOV in the treatment of ARDS is still considered by many to be a rescue modality. It is incumbent upon us as respiratory therapists to inform the medical community that the early use of HFOV may be helpful to the patient. The use of HFOV allows the respiratory therapist to deliver smaller tidal volumes at lower pressure and still maintain adequate alveolar ventilation. HFOV is not a modality stressed in the medical or clinical education of current critical care physicians. With proper training of critical care respiratory therapists and nurses it can become another adjunct in the treatment of this disease. Early intervention with HFOV has been shown to help in the treatment of ARDS but until the medical community is comfortable with this modality it will remain as a rescue device only.

To conclude, this study showed; there is an indirect correlation with AMP and Vt. As compliance improves the tidal volume, delivered to a patient on HFOV will increase and the AMP will decrease.

Definitions

Premarket Approval (PMA) - any premarket approval application for a class III medical device, including all information submitted with or incorporated by reference. "PMA" includes a new drug application for a device under section 520(l) of the FD&C Act.

Functional Residual Capacity (FRC) - this is the lung volume at the end of a normal expiration, when the muscles of respiration are completely relaxed

Lung compliance - the ease in which a structure distends. Mathematically lung compliance is volume change divided by pressure change. Normal lung compliance of the lung is 0.1 L/cmH2O.

Tidal Volume – the amount of air inspired and expired during one normal breath.

APPENDIX

Appendix A

Protocol

High-Frequency & Tidal Volume

Goals:

- To determine the delivered Vt at a predetermined lung compliance
- To examine the influence of lung compliance on the delivered Vt (n=5 for each compliance)

Methods:

- For lung compliance 10 mL/cm H_2O do five trials as follow;

  A) Test lung

    1. Use ASL 5000 breathing simulator.
    2. Connect the simulator ASL 5000 to line power then switch it on.
        i. The Motor red light is enabled.
        ii. Wait for the Motor red light to turn off.
        iii. ASL 5000 is calibrated and ready to be connected to the ventilator and computer.
    3. Connect the ASL 5000 to the host PC via Ethernet networking cable.
    4. Connect the ASL 5000 with HFOV through standard high-frequency breathing circuit and size 8.0 mm I.D. cuffed ETT.

B) Ventilator

1. Use SensorMedics 3100B

2. Calibrate the 3100B ventilator with capped standard high-frequency breathing circuit;

   i. Set bias flow at 30 L/min.

   ii. Mean Airway Pressure (mPaw) to maximum.

   iii. Pressure amplitude (delta-P) of 60 cm H2O.

   iv. Set inspiratory time (I-time) to 33%.

   v. Start the 3100B ventilator wait for the mPaw reading to reach between 40 & 45 cm H2O.

3. Set the 3100B ventilator to the following;

   i. Set power to 6.0; pressure amplitude reading will be variable.

   ii. Frequency (f) of 5 Hz.

   iii. Mean Airway Pressure will be variable.

   iv. Set bias flow at 30 L/min.

   v. I-time to 33%.

   vi. Oxygen to 50%.

4. Connect the standard high-frequency breathing circuit and size 8.0 mm I.D. cuffed ETT (Portex, Hythe Kent, England) to the ASL 5000.

5. Go to step (c – 9 – i).

C) Computer

1. After all necessary cable connections have been completed (step a – 3); launch the LabView software on the host PC.

2. Working page (welcome window) is presented;

    i. From welcome window choose run the software with Ethernet mode.

    ii. Welcome window will disappear and several windows will be stacking up on computer screen.

    iii. Host computer will attempt to synchronize with the ASL 5000.

    iv. Wait for ASL 5000 response (simulator piston will move).

3. From the Script Editor window chose (Adult_apnea.sct) file to edit its model parameter files.

4. From the Script File box click two times on the file name (Adult_apnea.sct).

5. A window titled "Step 1: Select Simulation Parameter Set" will open.

    i. Click edit to proceed to the next step.

6. A window titled step 2: choose a lung model will open.

    i. Chose the two compartment lung model.

    ii. Set resistance (Raw1) to 15 cm H_2O/L/sec.

    iii. Set resistance (Raw2) to 15 cm H_2O/L/sec.

    iv. Set compliance (CL1) to10 mL/cm H_2O.

    v. Set compliance (CL2) to 10 mL/cm H_2O.

    vi. Click next.

7. A window titled Step 3: Chest Wall Model will open.

    i. From chest wall model pop-up menu chose passive model.

    ii. Set the passive cycle to 12 breathes per minute.

    iii. Click next.

8. A window titled step 4: save simulation parameter set will open.

    i. Click save, to save the new variables in the file.

9. From the Central Runtime Window while the ventilator is running and connected to the ASL 5000

    i. Start the simulation by moving the "slide switch from the off to the on position.

    ii. From file window chose a name for the data file path to store the data.

    iii. Click OK.

10. Go to Breath Detection / Real-Time Analysis window.

    i. Check the save data to high resolution file checkbox.

    ii. Wait for the data of 250 breaths to be collected.

11. Turn off the simulation by moving the "slide switch from the on to the off position.

D) Data Collection

1. Launch the Lab VIEW software on the host computer.

2. Go to post-run window.

    i. Choose the file to be displayed click it two times.

ii. Open multiple parameter trend from the green box under the display data list.

3. Check the Vt waveform to establish the steady state.

i. The Vt increases gradually to build up the volume in the test lung

ii. The steady state is when there is no more increase in the Vt delivered

4. Review the volume waveform

5. Record the tidal volume and use it in data analysis.

- For the compliance of 15, 20,and 25 mL/cm H_2O do five trials as follow:

    1. Repeat steps 9 and 10
    2. Record data as explained in letter D

Appendix B: Raw data from trials:

Comp ml/cmH_2O	AMP	Vt	Comp ml/cmH_2O	AMP	Vt	Comp ml/cmH_2O	AMP	Vt	Comp ml/cmH_2O	AMP	Vt
10	88	118.31	15	86	121.93	20	84	123.58	25	82	131.93
10	88	116.36	15	86	123.42	20	84	123.79	25	82	132.02
10	87	118.87	15	86	121.02	20	84	126.99	25	82	132.85
10	87	117.36	15	86	119.64	20	84	125.77	25	82	131.68
10	87	117.29	15	86	122.62	20	84	126.08	25	82	132.11

Works Cited

Aljamhan, A.A., (2009). *How does alterations of airway resistance affect delivered tidal volume in adult patients receiving high-frequency oscillatory ventilation?* Retrieved, March 1, 2009, from http://etd.gsu.edu/theses/available/etd-12222008-025716/

Bollen, C. W., Well, G. J. van., Sherry, T., Beale, R. J., Shah, S., Findlay, G., Monchi, M., Chiche, J. D., Weiler, N., Uiterwaal, C. S., & Vught, A. J van., (2005). High frequency oscillatory ventilation compared with conventional mechanical ventilation in adult respiratory distress syndrome: a randomized controlled trial. Critical Care, (9), R430-R439.

Burton, G. G, Gee, G. G. & Hodgin, J.E., (1977) *Respiratory care a guide to clinical practice*. Philadelphia, J.B. Lippincott Company.

Carney, D., DiRocco, J., & Nieman, G., (2005). Dynamic alveolar mechanics and ventilator-induced lung injury. *Critical Care Medicine,* 33 (3), S122-S128.

Cartotto, R., Ellis, S. & Smith, T., (2005). Use of high-frequency ventilation in burn patients. *Critical Care Medicine,* 33 (3), S175-S181.

Chan, K. P. W., & Stewart, T. E. , (2005). Clinical use of high-frequency oscillatory ventilation in adult patients with acute respiratory distress syndrome. *Critical Care Medicine,* 33 (3), S170-S174.

Fan, E. & Stewart, T. E., (2006) High-frequency oscillatory ventilation and airway pressure release ventilation. *Clinics in Chest Medicine,* 27 (4), 615-625.

Fessler H., Hess D., (2007). Does high-frequency ventilation offer benefits over conventional ventilation in adult patients with acute respiratory distress syndrome? *Respiratory Care*, 52, 595-605.

Imai, Y. & Slutsky, A., (2005) High-frequency ventilation and ventilator-induced lung injury. *Critical Care Medicine,* 33 (3), S129-S134.

INOmax, Clinical information [Power Point presentation]. Retrieved April 1, 2009 from http://www.inomax.com/ino-mechanism.html

Pilbeam, A.P. & Cairo, J.M., (1998). *Mechanical ventilation physiological and clinical applications.* Missouri: Mosby Books.

PMA Number P890057/S14 Model 3100B HFOV Filed May 21, 2001, Retrieved July 21, 2008 from http://www.fda.gov/cdrh/pdf/p890057s014a.pdf

Pillow, J. J. PhD., (2005) High-frequency oscillatory ventilation: mechanisms of exchange and lung mechanics. Critical Care Medicine, 33 (3), S135-S147

Premarket approval (PMA) is the FDA process of scientific and regulatory review to evaluate the safety and effectiveness of Class III medical devices, Retrieved July 21, 2008 from http://www.fda.gov/CDRH/DEVADVICE/pma

Summary of safety and effectiveness data, July 16, 2001, Retrieved July 21, 2008 from http://www.fda.gov/cdrh/pdf/p890057s014b.doc

Slutsky, A. S., & Drazen, J. M., (2002 August 29). *Ventilation and small tidal volumes*, The New England Journal of Medicine, 347, 630-631

Tobin, M. J., (2006)) *Principals & practice of mechanical ventilation.* New York: McGraw- Hill.